REV	ZONE	DESCRIPTION	APPROVED	DATE
-		INTITAL RELEASE		

NOTES, UNLESS OTHERWISE SPECIFIED

1. UNSPECIFIED FILLET RADII .005-.010.
2. MATERIAL: AL BAR 6061-T651
3. THREADS PER ANSI B1.1.

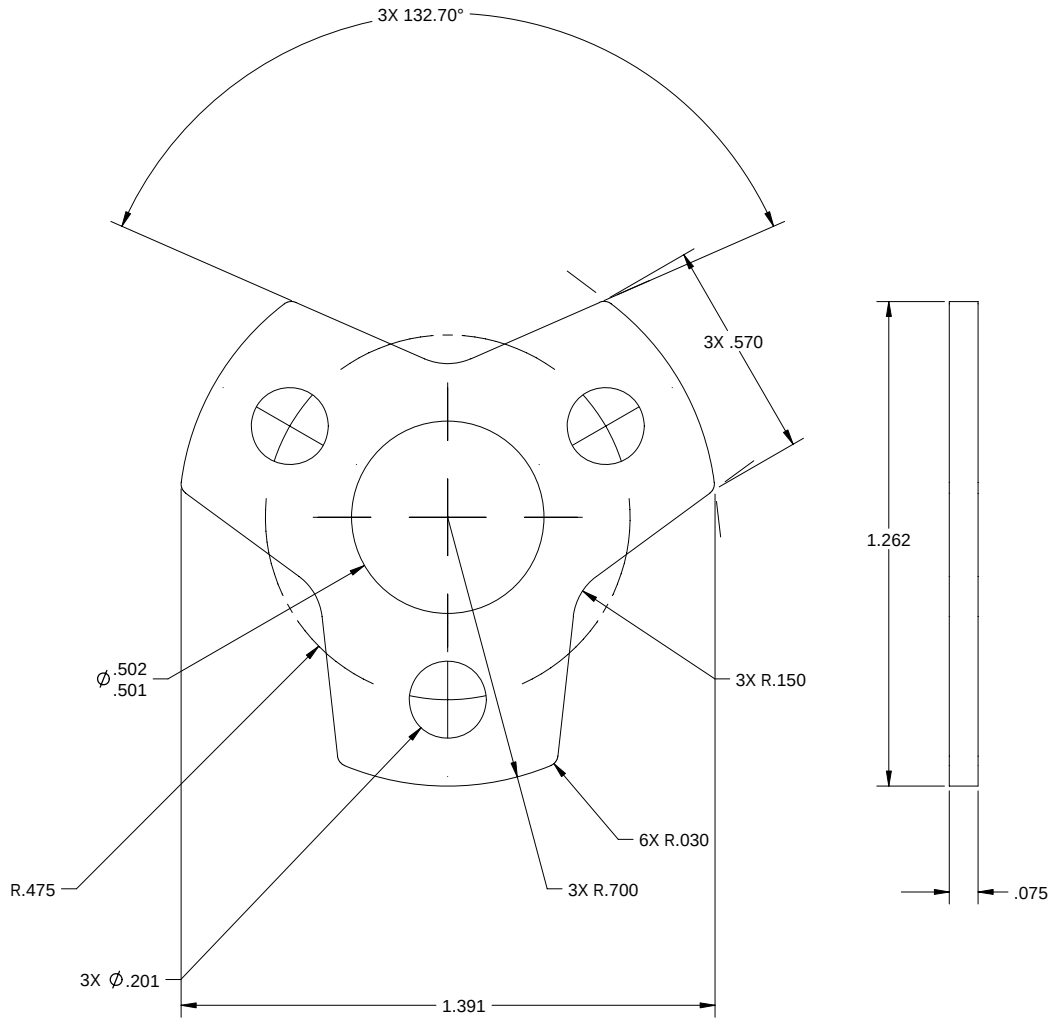

ALL DIMENSIONS ARE IN INCHES- INTERPRET DRAWING PER ASME Y14.5 -1994

TOLERANCES UNLESS OTHERWISE SPECIFIED:

X.X ± .03 ∠ ± .5°
X.XX ± .01
X.XXX ± .005 125

REMOVE ALL BURRS AND SHARP EDGES .005 R OR CHAMFER MAX

APPROVED	DATE
PREP BY D. ANDERSON	
CHECKED	
RESP ENG	
MFG ENG	
QUAL ENG	

♦ = (CRITICAL DIMENSION)

Franklin W. Olin College of Engineering

SPACER, TURBINE DISC

SIZE	FSCM NO.	PART NO.	PART REV	DOC REV
C				01
SCALE 4:1		WT	SHEET 1	OF 1